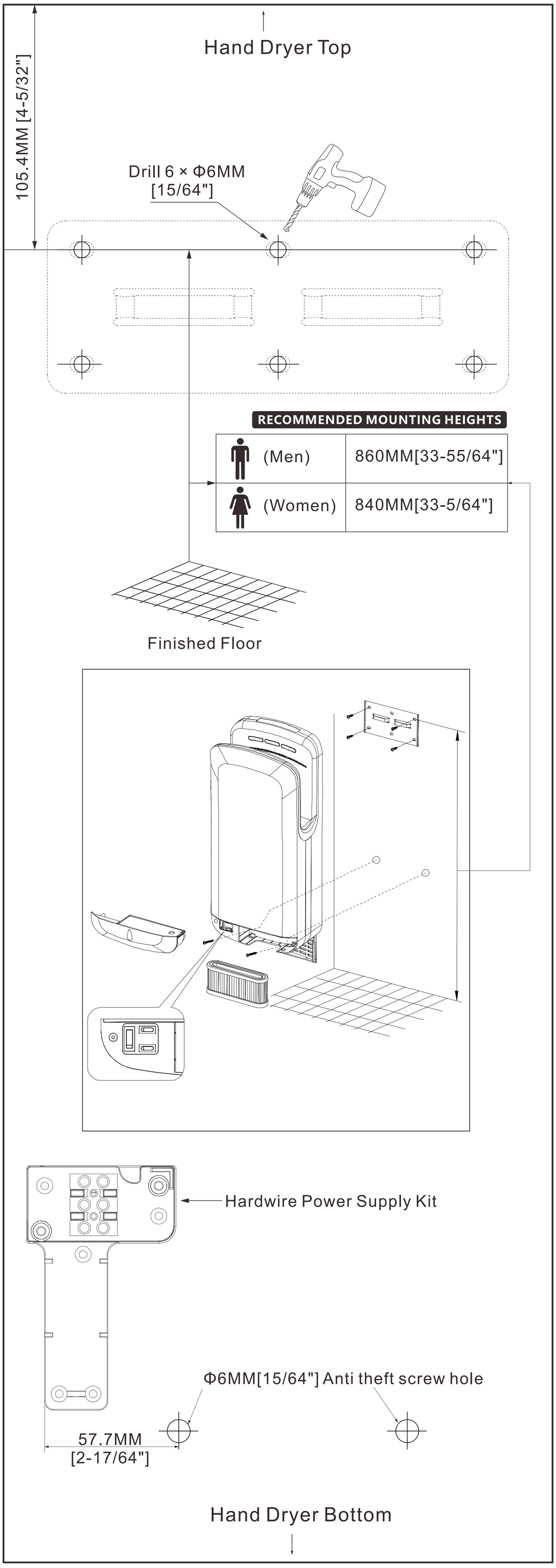
Hand Dryer Top
105.4MM [4-5/32"]
Drill 6 × Φ6MM
[15/64"]
RECOMMENDED MOUNTING HEIGHTS
(Men)
860MM[33-55/64"]
(Women)
840MM[33-5/64"]
Finished Floor
Hardwire Power Supply Kit
Φ6MM[15/64"] Anti theft screw hole
57.7MM
[2-17/64"]
Hand Dryer Bottom